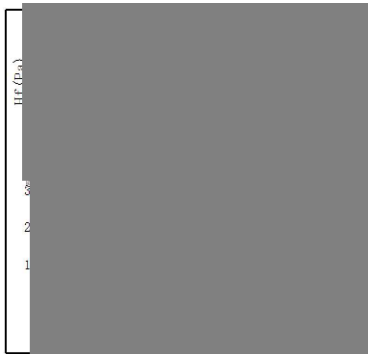
Hf(Pa)

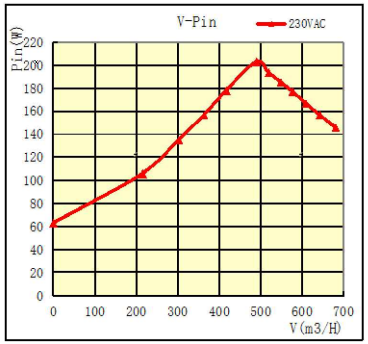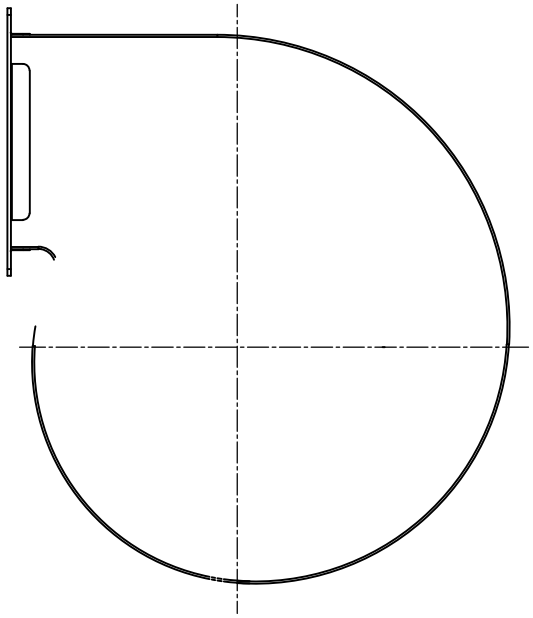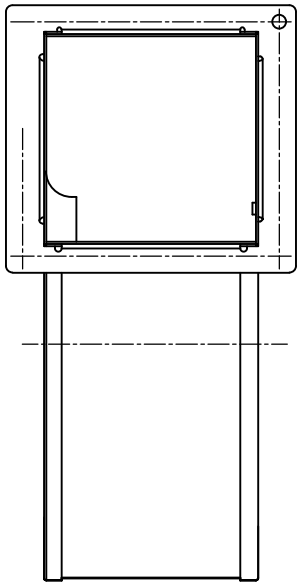
V-Pin
230VAC
Pin(W)
220
200
180
160
140
120
100
80
60
40
20
0
0
100
200
300
400
500
600
700
V(m3/H)